Comparison of Concrete Rheometers

First phase test results indicate comparability between different devices

BY LYNN E. BROWER AND CHIARA F. FERRARIS

Concrete mixtures require sufficient workability for proper placement. In particular, sprayed, pumped, and self-consolidating concretes need careful definition and control of their flow properties for good workability. ACI Subcommittee 236-A, "Workability of Fresh Concrete," is taking a material science-based approach to provide better methods for measuring concrete workability.

Fresh concrete workability is most often associated with the slump value measured using ASTM C 143. Slump value, however, does not completely describe the workability of some concrete mixtures. For example, two shotcrete mixtures with the same slump can require different pumping pressures. Also, two self-consolidating concrete mixtures with the same "slump" or slump flow values can have different flow capabilities when filling reinforced formwork.

Concretes having the same slump can behave differently during placement because flow is not defined by a single parameter. The Bingham model can be used to describe the flow of concrete. It describes a linear relationship between the stress acting to shear concrete (shear stress = τ) and the rate at which it is sheared (shear rate = $\dot{\gamma}$), as follows

$$\tau = \tau_0 + \mu\dot{\gamma} \qquad (1)$$

The Bingham model has two parameters: τ_0, the yield stress, and μ, the plastic viscosity.

Workability of a fresh concrete mixture is closely related to the flow properties of the concrete. A sufficient description of such flow properties requires a minimum of two parameters. In general, work-

TABLE 1:
TESTING THE ROTATIONAL RHEOMETERS FOR CONCRETE

BML (Iceland)[7,8]
BTRHEOM (France)[9,10]
CEMAGREF-IMG (France)[11]
IBB (Canada)[12]
Two-Point (UK)[13]

*Commercial equipment, instruments, and materials mentioned in this article are identified to foster the reader's understanding. Such identification, however, does not imply recommendation or endorsement by the National Institute of Standards and Technology (NIST), nor does it imply that the materials or equipment identified are necessarily the best available for the purposes described.

TABLE 2:
COMPOSITIONS OF CONCRETE MIXTURES, KG/M^3

Mixture No.	1	2	3	4	5	6	7	8	9	10	11	12
CoarseAgg - Pontreaux 10/16	368	482	620	456	1161	780	768					
CoarseAgg - Pontreaux 5/12.5	588	405	356	458		175	173					
CoarseAgg - Longue 10/20								563	461	600	550	
CoarseAgg - Longue 4/10								363	394	349	317	
CoarseAgg - Pontreaux 2/6.3												825
FineAgg - Estuaire 0/4	763	804	440	783	661	773	762	739	797	438	743	564
FineAgg - Palvado 0/0.4				56		52	52				53	
Cement - CPA CEM I 52.5	494	426	423	419	391	314	310	480	422	725	398	613
Filler - Piketty limestone						135	133					107
Silica Fume - Anglefort		21.3							21.1			
Admixture - Polycarboxylate	6.294	6.722	11.403	0	1.59			6.414	5.316	7.608	1.164	10.215
Admixture - Sulfonated Melamine						13.837	10.175					
Viscosity Agent						8.171	8.059					
Water	188	216	222	201	194	175	184	205	218	225	213	230

ability tests for concrete should estimate both parameters.

Measurements of yield stress and slump on concretes having a wide range of mixture proportioning show that yield stress correlates with slump: concrete with a low yield stress value has a high slump value.[1,2] On the other hand, plastic viscosity cannot be measured by means of slump testing. Therefore, other tools are needed to completely determine the flow properties of concrete and to better describe concrete workability.

Several instruments have been designed to measure concrete workability.[3-5] Hackley and Ferraris[4] classified various instruments depending on the type of flow induced: free flow (slump), confined flow (flow cone), vibration (Ve-Be time), and rotational shear flow (rheometers).

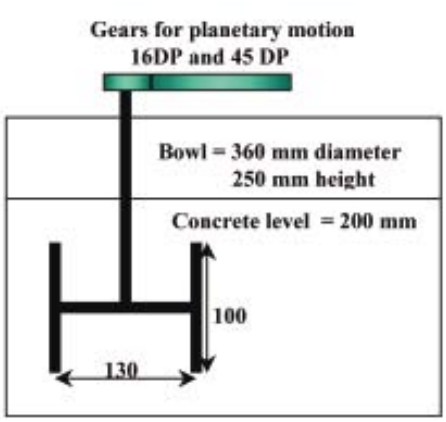

Fig. 1: Schematic of the IBB rheometer (all dimensions in mm)

RHEOMETERS

Rheometer technology is based on hydraulic science and stems from models and devices developed for fluids such as oil and polymer. Most commonly used rheometers measure shear stress while the tested fluid is subjected to a controlled shear rate. Because commercially available rheometers are designed for simpler, more homogenous liquids, they are not well suited for measuring fluid materials like fresh concrete that contain solid particles. In the last 10 years, however, five rotational rheometers have been designed to measure the flow properties of concrete. Each instrument employs a different rotational geometry: two use coaxial cylinders; one, parallel plates; and the last two employ rotating vanes.[3]

Ideally, rheometer test results should be comparable and independent of the specific device performing the measuring. Results from different conventional rheometers can be compared by measuring a standard reference material with each rheometer. In fact, certified reference materials (CRM) are commonly used to calibrate these devices for simpler liquids. Unfortunately, no such CRM exists for concrete rheometry. Therefore, the investigating team had to gather the different concrete rheometers in one location for testing the same mixtures, resulting in the ACI 236-A project described in this article. This first ever, single location testing of concrete rheometers was organized by members of the subcommittee under sponsorship of ACI's Concrete Research Council (CRC).

The Laboratoire Central des Ponts et Chaussees (LCPC) hosted Phase I of the testing program in Nantes, France, in October 2000. The rheometers then tested included four commercially available units and one large coaxial type developed specifically for research. The goals of this first phase endeavor were to compare data measured by the various

rheometers on the same concrete mixtures and to establish correlation functions between their results. These detailed results, correlation functions, and conclusions of these Phase I tests are described in Reference 6. Planning of Phase II tests, which will further improve the correlations between the rheometers, is currently under way.

The five instruments listed in Table 1 are all rotational rheometers, that is, one part of the device rotates at varying speeds and the torque induced by the resisting concrete is measured. Thus the raw data from each instrument gives a record of torque versus rotation rate. Beyond these basic similarities, however, the rheometers chosen differ widely in size of test samples, rotational geometries, calibrations, and computational procedures required to calculate the two Bingham-model parameters.

The IBB and Two-Point rheometers both have a rotating impeller inserted into fresh concrete placed in a cylindrical container. The IBB (Fig. 1) uses an H-shaped impeller that rotates in a planetary motion, whereas that for the Two-Point has a helical pattern, as shown in Fig. 2. Both impellers rotate axially at the center of the sample chamber, and the torque generated in each unit is measured as a function of rotation rate.

The BML (Fig. 3) and CEMAGREF-IMG (Fig. 4) devices are coaxial cylinder rheometers. In these, one cylinder (inner cylinder for the CEMAGREF-IMG and outer for the BML) is rotated at varying speed. Torque on the inner cylinder is measured when a concrete sample fills the gap between the inner and

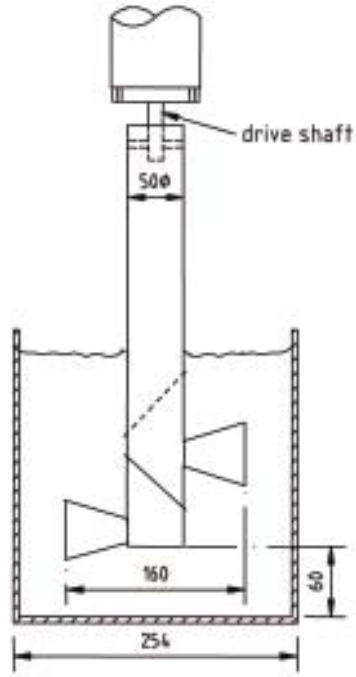

Fig. 2: Schematic of the Two-Point rheometer (all dimensions in mm)

TABLE 3:
SLUMP MEASURES AND CALCULATED YIELD STRESS AND PLASTIC VISCOSITY VALUES

Mixture No.	Slump	BML		BTRHEOM		CEMAGREF-IMG*		IBB		Two-Point	
		Yield stress	Plastic viscosity	Yield stress	Plastic viscosity	Yield stress	Plastic viscosity	Yield stress	Plastic viscosity	Yield stress	Plastic viscosity
	mm	Pa	Pa · s	Pa	Pa · s	Pa	Pa · s	N · m	N · m · s	Pa	Pa · s
1	97	738	114	1619	181	1832		10.84	14.72	919	61
2	225	76	17.4	406	18	437	3	0.34	5.34	80	13
3	187	408	82.4	771	136			3.67	13.20	314	83
4	90	840	72	2139	51	2138		7.44	11.65	1059	
5	105	910	108	1753	94			3.91	14.61	698	19
6	227	139	45	505	78	487	63	1.80	10.31	145	41
7	232	90	32.7	549	54	410	43	0.86	9.31	98	38
8	128	717	29	1662	67	1417		5.71	8.84	689	22
9	232	125	15	624	25	504	3	0.95	6.06	159	19
10	222	248	35.9	740	50	535	43	1.98	8.88	253	19
11	132	442	29	1189	27	1034	21	3.97	6.57	516	16
12	150	584	39	1503	38	929	47	6.23	9.07	525	22

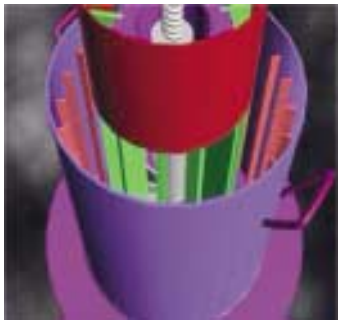

Fig. 3: Picture of the container and blades of the BML rheometer

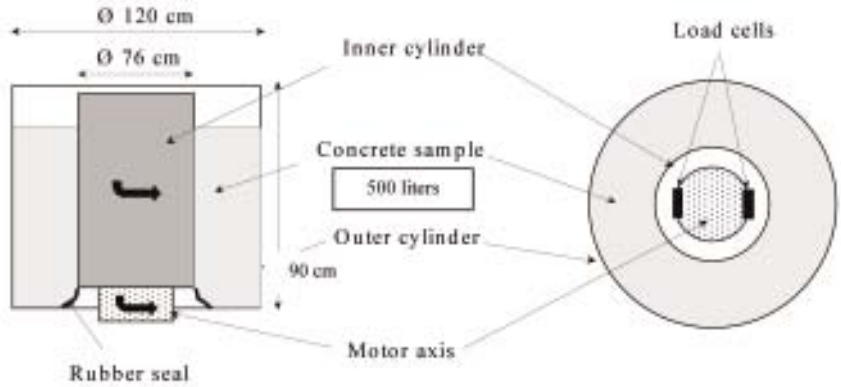

Fig. 4: Schematic of the CEMAGREF-IMG rheometer (dimensions in cm)

outer cylinders. The most striking difference between these two rheometers is the size of test sample. For BML, the concrete sample size is only 17 L (0.6 ft^3), but the CEMAGREF-IMG tests with 500 L (17.7 ft^3).

The BTRHEOM rheometer (Fig. 5) is a parallel-plate unit, its concrete sample being placed within a cylindrical container having a fixed bottom plate. A top plate embedded in the concrete rotates at varying speeds and the torque on this plate is measured.

CONCRETE MIXTURES TESTED

Twelve concrete mixtures were designed at LCPC using mixture-design software* (refer to Table 2). The objective was to obtain wide combinations of yield stress and plastic viscosity properties while minimizing segregation. This strategy followed for mixture series 1 to 4 and 8 to 11—the main difference between these two series being the nature of the coarse aggregate (angular for 1 to 4, rounded for 8 to 11).

Mixture 5 included a gap-graded aggregate blend having a coarse-to-fine aggregate ratio slightly higher than most recommendations. The idea was to generate a mixture in which mortar and coarse aggregate would have a tendency to separate from each other but would not display any obvious segregation in the normal operations of mixing, discharging, and casting.

Mixtures 6 and 7 were self-consolidating, having very low yield stresses, moderate plastic viscosities, and high stabilities at rest. Both mixtures were of the same "dry" composition, differing only in water content and high-range water-reducing admixture (HRWRA) dosage.

In turn, Mixture 12 was a high-performance concrete containing very small coarse aggregate (maximum top size = 6.3 mm [0.25 in.]), a high amount of fines, and having a low yield stress and a moderate plastic viscosity. This mixture was designed purposely to minimize instrument wall effects and segregation in the various rheometers.

LOCAL MATERIALS USED

The 12 mixtures contained materials locally available in Nantes. Their cement was CPA CEM I 52.5 (equivalent to an ASTM Type I). A limestone filler was added to the self-consolidating mixtures (6 and 7) and to Mixture 12. When required, a densified silica fume applied to mixtures resulted in low yield stresses and low plastic viscosities. Most of the mixtures contained an HRWRA—either a polycarboxylate or a sulphonated melamine type. A viscosity agent was added to self-consolidating mixtures. Investigators employed tap water in all concretes tested. Table 2 lists the mixture proportions, admixture dosages, and design targets.

Concrete mixtures were produced at the Mixing Study Station of LCPC, in Nantes, using a 1 m^3 (1.3 yd^3) pan mixer, each being discharged onto a conveyor belt then into two transport containers. Investigators conducted an automatic sampling of the concrete eight times throughout the total discharge to transport containers to check for segregation and to be assured that the same concrete composition was being delivered to all the rheometers. A 500 L (17.7 ft^3) container fed concrete to the CEMAGREF-IMG rheometer, but a smaller container served the others. The smaller rheometers were loaded with concrete by hand scooping from the small container, which was hand-agitated to minimize segregation. Total time of mixing and filling was monitored.

Measurements of slump and calculated values of yield stress and plastic viscosity for the rheometers are presented in

*BétonlabPro 2 gives concrete mixture proportioning in the Windows environment. For more information see http://www.lcpc.fr/LCPC/Bottin/Organigramme/TGCE/english/INDEX_DTGCE.htm.

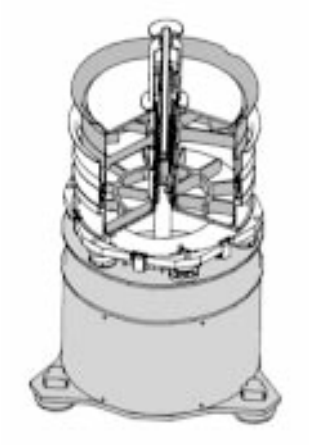

Fig. 5: Cut-away sketch of BTRHEOM rheometer

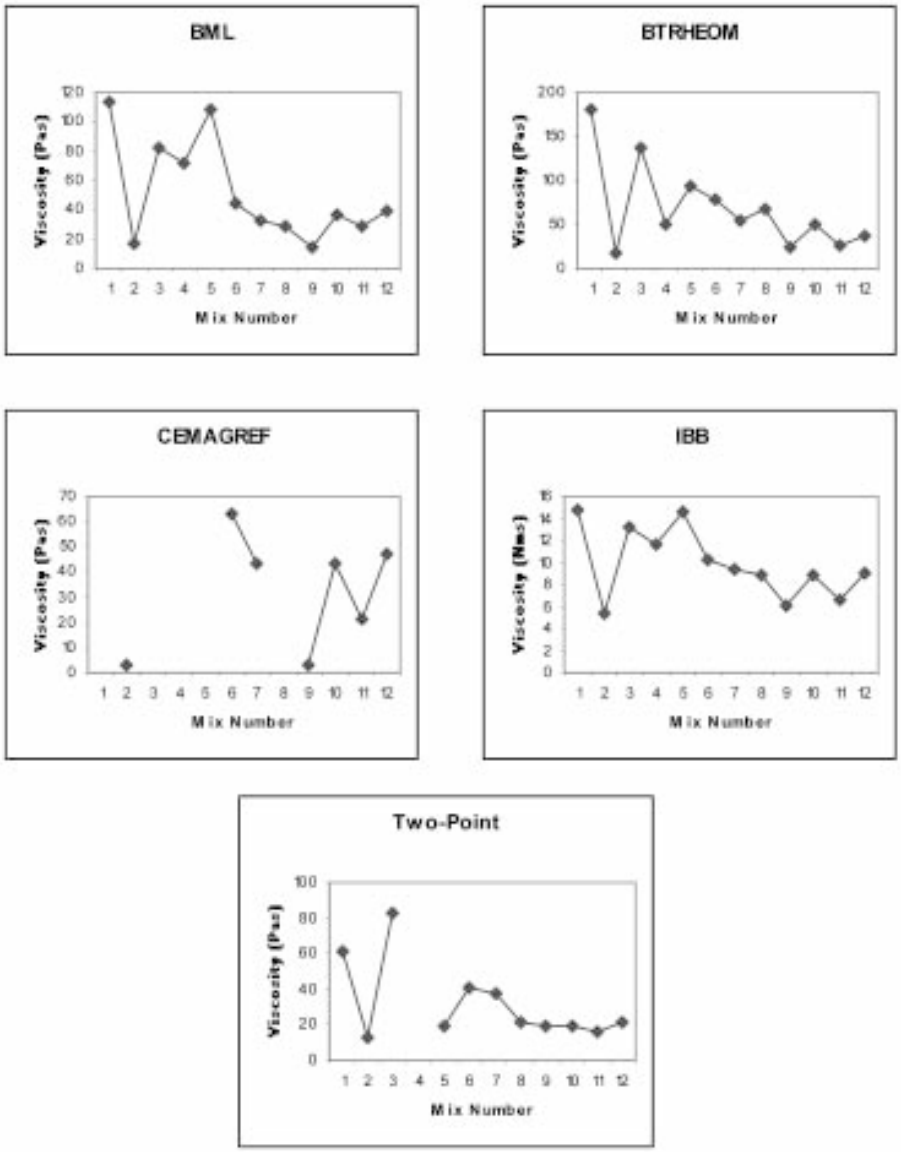

Fig. 6: Viscosity for each rheometer and mixture

Table 3. It should be noted that one of the rheometers, IBB, did not provide results in fundamental units. The empty cells in Table 3 are unreported data points stemming from operational problems with the measurements—such as resulting torque being beyond the range of the rheometer.

COMPARISONS WITH CONCRETE COMPOSITION

The concrete mixtures in this program successfully provided a wide range of flow properties. For example, flow property combinations, such as high viscosities with high yield stresses (Mixtures 1 and 8 in Table 2) or high viscosities with low yield stresses (Mixtures 3 and 10 in Table 2) were used to test the rheometers. This was accomplished over a wide range of concrete flow properties. Ideally, we would hope that all rheometers would provide the same absolute values for yield stress and viscosity from the given concrete mixture. A glance at Table 3, however, shows that the rheometers tested did not produce identical values between themselves for each mixture, nor do Fig. 6 and 7. Nevertheless, the results from all the rheometers did exhibit the same general pattern of response for viscosity and yield stress among the 12 mixtures. In fact, statistical analysis[6] illustrated that the classifications derived from the various devices are not independent. This implies that concretes would be classified in the same order with whatever instrument was used.

Yield stress values obtained from the rheometers were compared with more commonly used slump test measurements. Previous work has shown that yield stress is correlated with slump.[1,2] As shown in Fig. 8, this conclusion has validity. The yield stress correlation relation, or slope, however, with slump is not the same for all five rheometers. This is revealed by the linear-fit lines in Fig. 8, nor are the fitting lines on top of each other, because the rheometers do not give the same absolute values for the same concrete mixture.

Although a correlation exists among the rheometers tested in this program, and the absolute values calculated for a given mixture were not identical, it was found that:

1. All the rheometers ranked the mixtures in the same order both

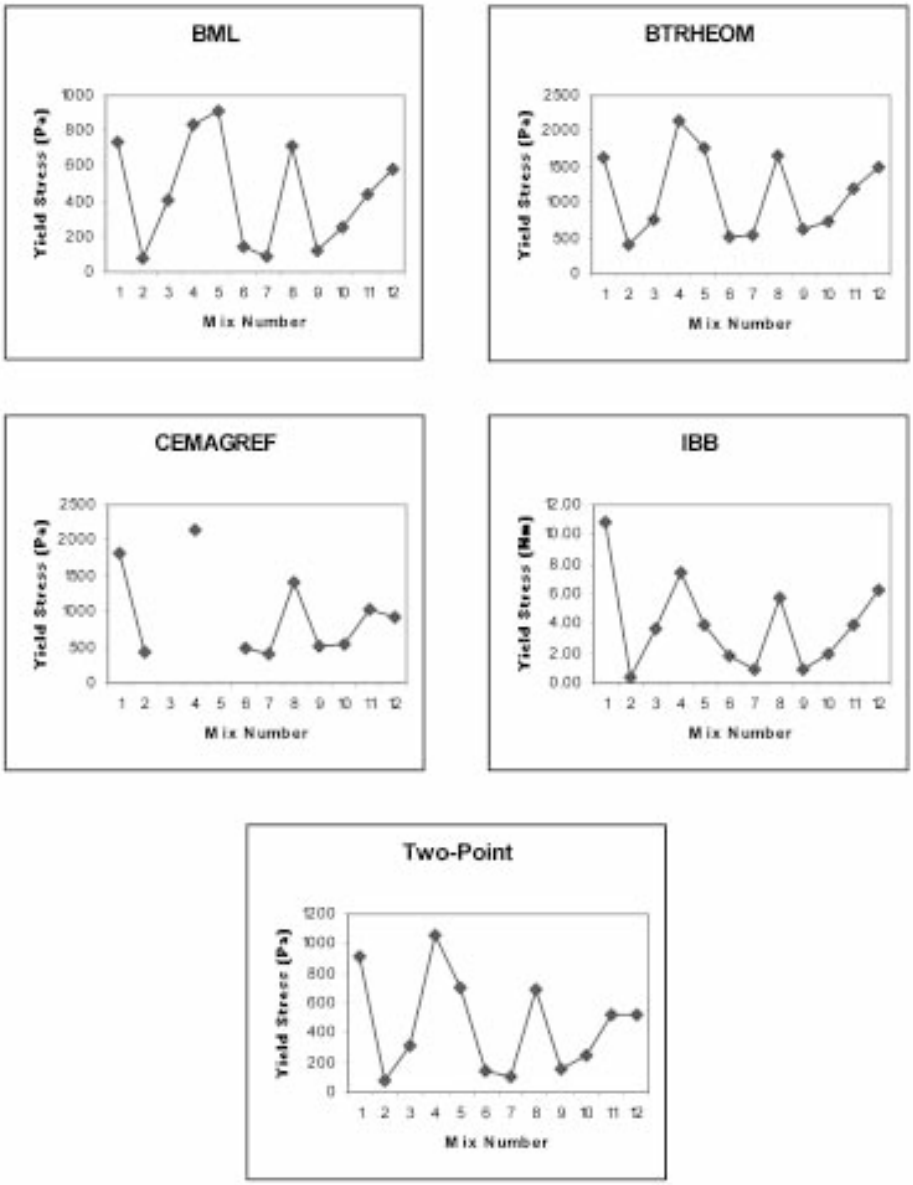

Fig. 7: Yield stress for each rheometer and mixture

for yield stress and for plastic viscosity to a good degree of statistical confidence;

2. The degree of correlation of both yield stress and plastic viscosity measurements between any pair of rheometers proved reasonably good. The correlations, factors, and equations are given in Reference 6;
3. Differences in absolute values given by the various rheometers may be attributed to several causes, such as slip at the instrument wall interface with the concrete or the confinement of concrete between moving parts of the rheometers. Further research is needed to quantify and, if necessary, to correct for these effects; and
4. Yield stress as measured with any of the rheometers correlates with slump test results.

It is encouraging that Findings 1 and 2 apply to instruments operating on different principles and geometries. All the rheometers tested are therefore able to portray the rheology or flow of fresh concrete, and the correlations obtained will assist in the analysis and comparison of results from different rheometers in different laboratories. There are still consistent disparities, however, that cannot be explained unambiguously at this point, and further research is needed. ACI 236-A is thus planning additional tests to further evaluate rheometer instruments and provide answers to these questions.

Acknowledgments

This project was made possible by the financial support of the ACI CRC and the involvement of ACI 236-A members. We are thankful for the hospitality and the professionalism of the staff of LCPC, who welcomed the international team for the week-long tests. We would like to thank, especially, the authors of the report in Reference 6: Phil Banfill, Denis Beaupré, Frédéric Chapdelaine, François de Larrard, Peter Domone, Laurent Nachbaur, Thierry Sedran, Olaf Wallevik, and Jon E. Wallevik. This project would not have been possible without their participation in the test program and their contributions to the final report. We would also like to thank all the participants and their organizations for their involvement in the planning and execution of this comparison. A complete list is also given in Reference 6.

References

1. Ferraris, C. F., and de Larrard, F., "Testing and Modeling of Fresh Concrete Rheology," NISTIR 6094, 1998 (http://ciks.cbt.nist.gov/~garbocz/rheologyNISTIR/FR97html.htm).

2. de Larrard, F.; Hu, C.; Sedran, T.; Sitzkar, J.C.; Joly, M.; Claux, F.; and Derkx, F., "A New Rheometer for Soft-to-Fluid Fresh Concrete," *ACI Materials Journal*, V. 94, No. 3, May-Jun. 1997, pp. 234-243.

3. Ferraris, C. F., "Measurement of the Rheological Properties of High-Performance Concrete: State-of-the-Art Report," *Journal of Research of NIST*,

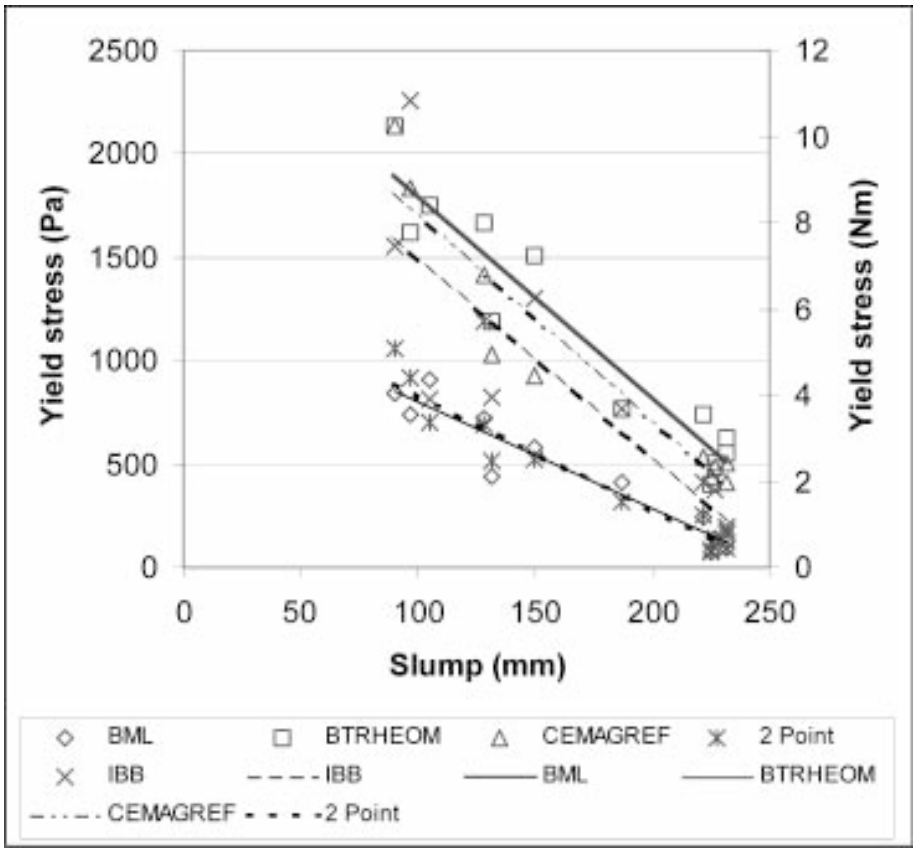

Fig. 8: Comparison of standard slump and yield stress from the five rheometers

V. 104, No. 5, 1999, pp. 461-478 (http://www.nist.gov/jres).

4. Hackley, V. A., and Ferraris, C. F., 'The Use of Nomenclature in Dispersion Science and Technology," *NIST Recommended Practice Guide*, SP 960-3, 2001 (http://www.ceramics.nist.gov/).

5. Bartos, P. J. M.; Sonebi, M.; and Tamimi, A. K., eds., "Workability and Rheology of Fresh Concrete: Compendium of Tests," *RILEM Report* 24, 2002.

6. Ferraris, C. F., and Brower, L., eds., "Comparison of Concrete Rheometers: International Tests at LCPC (Nantes, France) in October 2000," NISTIR 6819, Sept. 2001 (available at http://ciks.cbt.nist.gov/~garbocz/pciself/pcimain.htm).

7. Wallevik, O. H., "The Rheology of Fresh Concrete and its Application on Concrete with and without Silica Fume," Dr Ing thesis 1990:45, NTH Trondheim, 1990, p. 185. (in Norwegian)

8. Wallevik, O. H., and Gjorv, O. E., "Development of a Coaxial Cylinder Viscometer for Fresh Concrete," *Properties of Fresh Concrete, Proceedings of the RILEM Colloquium*, Chapman & Hall, Hanover, Oct. 1990, pp. 213-224.

9. de Larrard, F.; Szitkar, J.-C.; Hu, C.; and Joly, M., "Design of a Rheometer for Fluid Concretes," *RILEM Workshop Special Concretes—Workability and Mixing*, 1993, pp. 201-208.

10. de Larrard, F.; Sedran, T.; Hu, C.; Szitkar, J. C.; Joly, M.; and Derkx, F., "Evolution of the Workability of Superplasticized Concretes: Assessment with BTRHEOM Rheometer," RILEM International Conference on Production Methods and Workability of Concrete, *RILEM Proceedings* 32, Glasgow, Scotland, 1996, pp. 377-388.

11. Hu, C., "Rhéologie des Bétons Fluides," Etudes et Recherches des Laboratoires des Ponts et Chaussées, OA 16, Paris, France, 1995, 203 pp.

12. Beaupré, D., "Rheology of High-Performance Shotcrete," PhD thesis, University of British Columbia, Canada, 1994.

13. Domone, P. L. J.; Yongmo, Xu; and Banfill, P. F. G., "Developments of the Two-Point Workability Test for High-Performance Concrete," *Magazine of Concrete Research*, V. 51, pp. 181-190, 1999.

Received and reviewed under Institute publication policies.

ACI member **Lynn E. Brower**, is a scientist at Master Builders, Inc., Cleveland Technical Center, working in the Admixture Product Development Group since 1993. He has worked as a product development and research scientist for 30 years in both industrial and government positions. He is Secretary of ACI Subcommittee 236-A, Workability of Fresh Concrete.

Chiara F. Ferraris, FACI, is a physicist in the Building Materials Division of the NIST Building and Fire Research Laboratory since 1994. She is Chair of ACI Committee 236, Material Science of Concrete, and Subcommittee 236-A, Workability of Fresh Concrete, as well as the Vice Chair of Committee 235, Knowledge-Based Systems and Mathematical Modeling for Concrete Materials. The main emphasis of her research is on the rheology of concrete and cementitious materials.